Unsigned Multiplier

Md. Momenul Haque
Lecturer, CSE, BAUET

Unsigned Multiplication Example

For unsigned number,

```
        1011  (+11)
        1101  (+13)
    --------
    00001011
    0000000X
    001011XX
    01011XXX
    --------
    10001111  (+143)
```

The "Binary" Multiplication Table

*	0	1
0	0	0
1	0	1

We can see that
multiplying 2 4-bit (unsigned) binary numbers results in 8-bit binary number.

Unsigned Multiplier Design

For unsigned number,

```
                        X3     X2     X1     X0
                    x   Y3     Y2     Y1     Y0
-----------------------------------------------------------
                    X3Y0   X2Y0   X1Y0   X0Y0
            X3Y1    X2Y1   X1Y1   X0Y1
     X3Y2   X2Y2    X1Y2   X0Y2
X3Y3 X2Y3   X1Y3    X0Y3
-----------------------------------------------------------
```

X = Multiplicand
Y = Multiplier
Z = Product

Every line in multiplication is called Partial Product.

1. **We can perform AND operation with every Multiplicand bit (A3-A0) and current Multiplier bit (B0)**
2. **We can perform ADD operation between current line and previous line.**
3. **We should also consider carry bit of each addition that will propagate to next bit**

Unsigned Multiplier Building Block

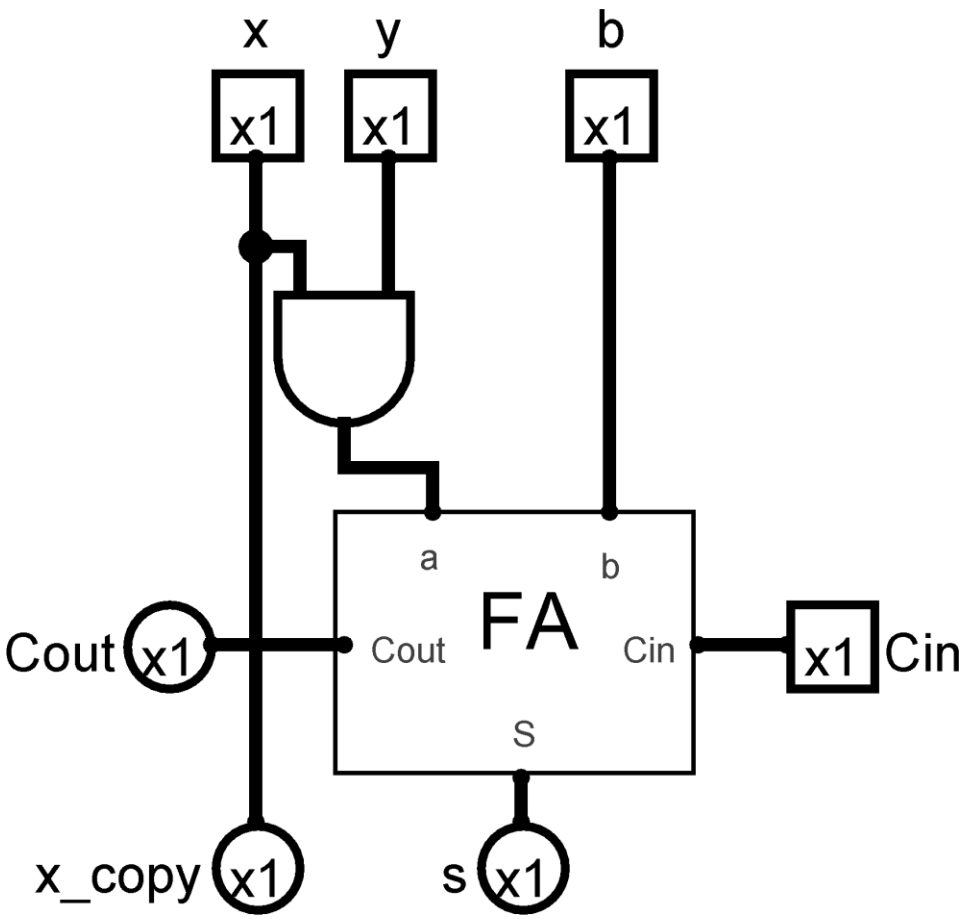

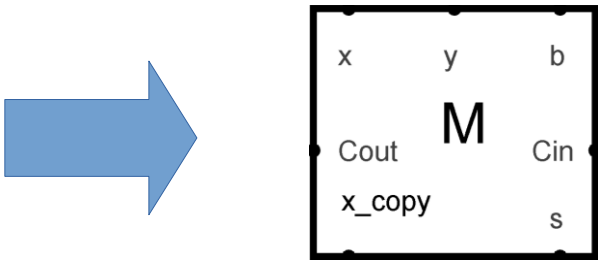

Figure: Cell M (Building Block)

```
Cout,S = (X AND Y) ADD A ADD B
```

We are going to use a building block (Cell M) to create unsigned multiplier.

2 * 2 Unsigned Multiplier

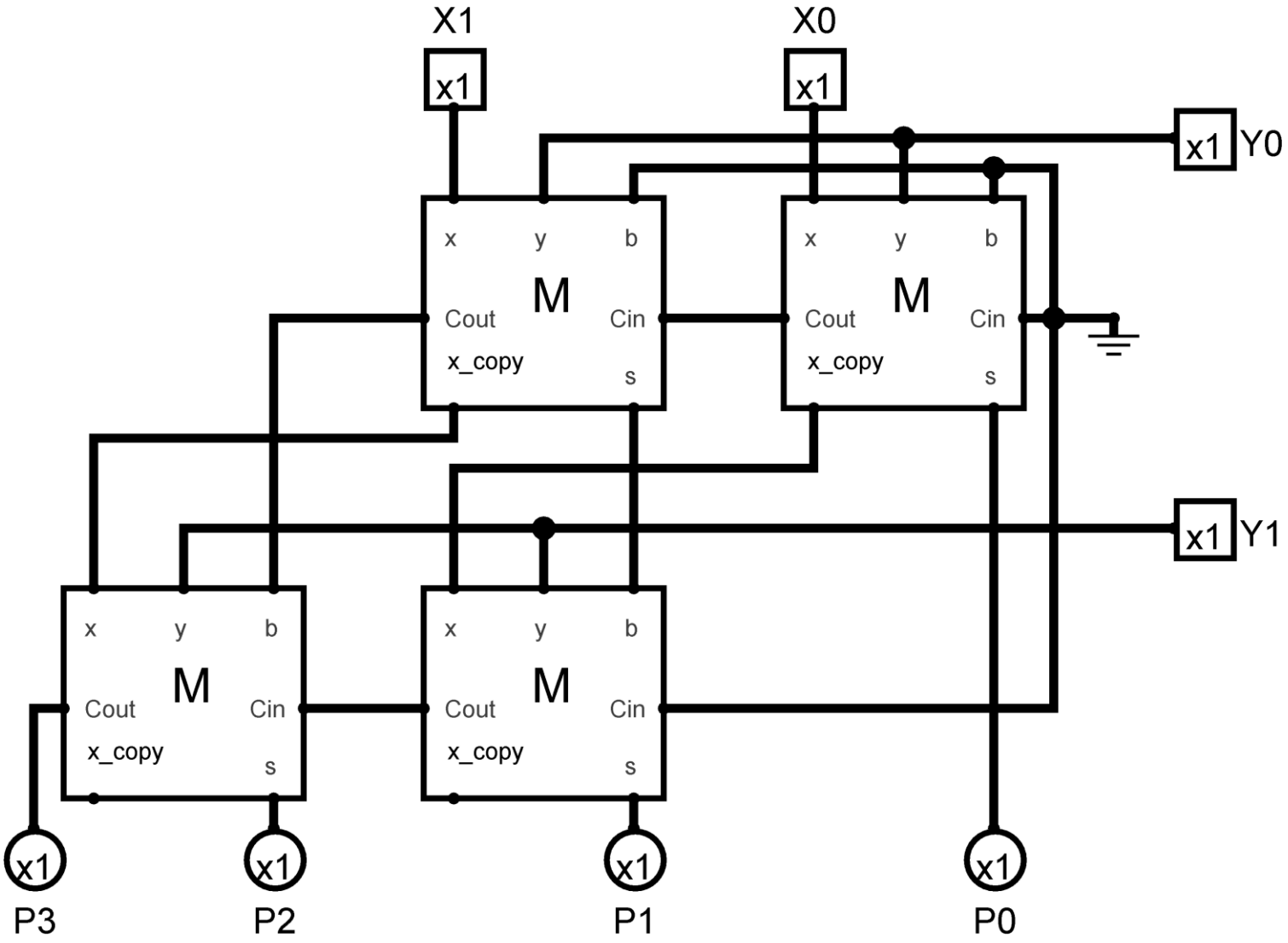

Figure: 2 *2 Unsigned Multiplier

2 * 2 Unsigned Multiplier Simulation

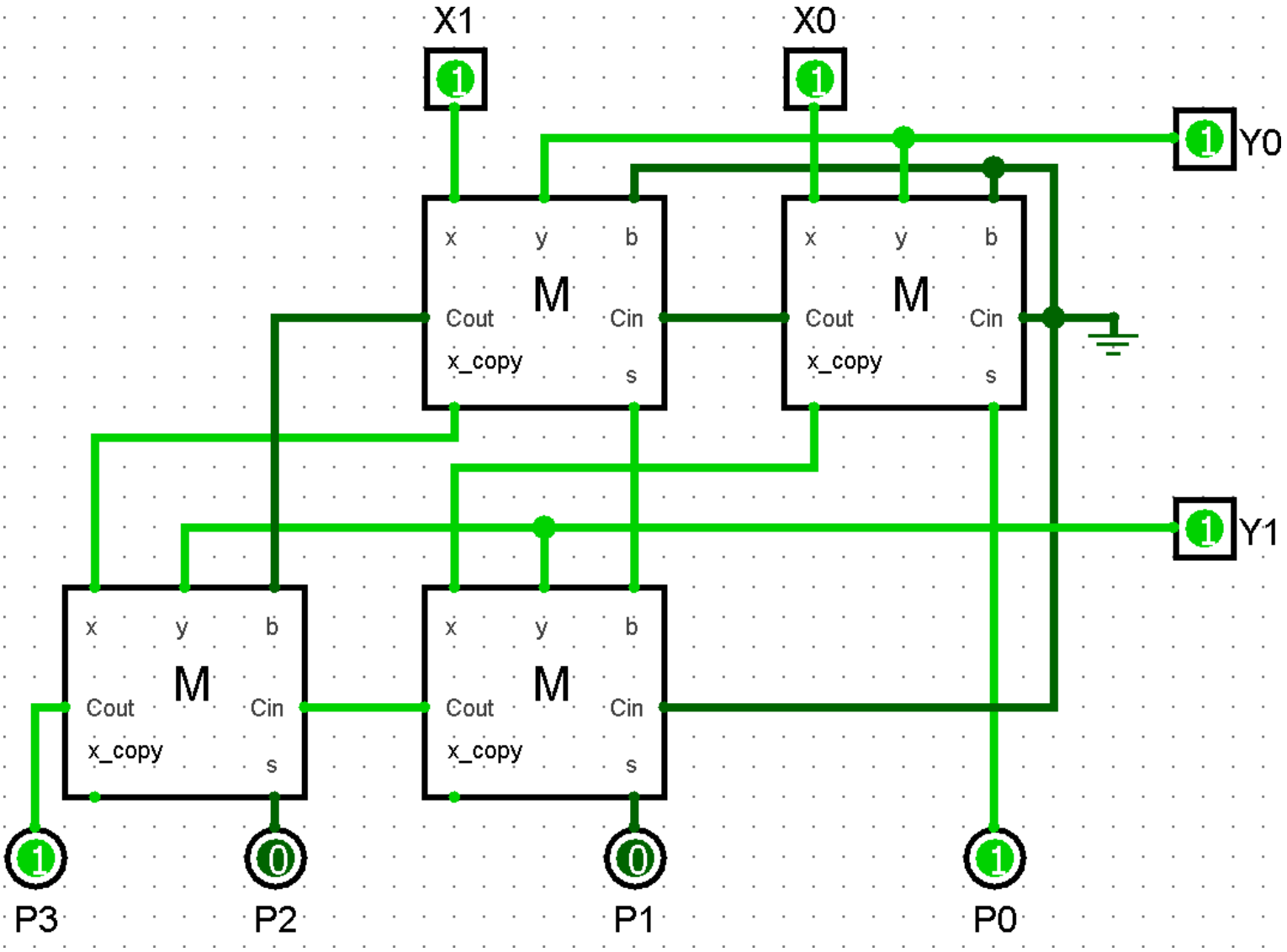

Figure: 2 *2 Unsigned Multiplier Simulation for input X = 11 and Y = 11

2 * 2 Unsigned Multiplier Simulation

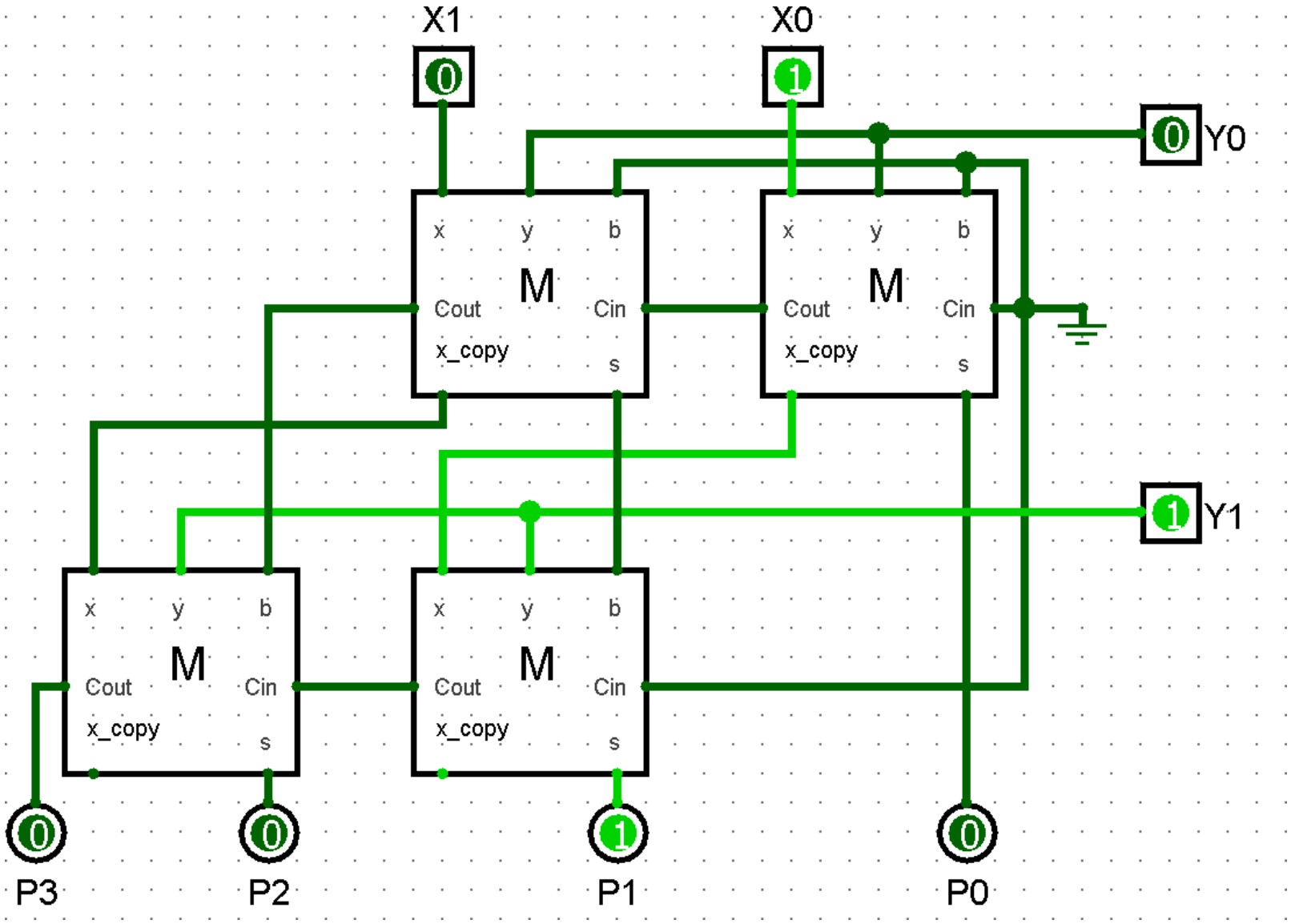

Figure: 2 *2 Unsigned Multiplier Simulation for input X = 01 and Y = 10

4 * 4 Unsigned Multiplier

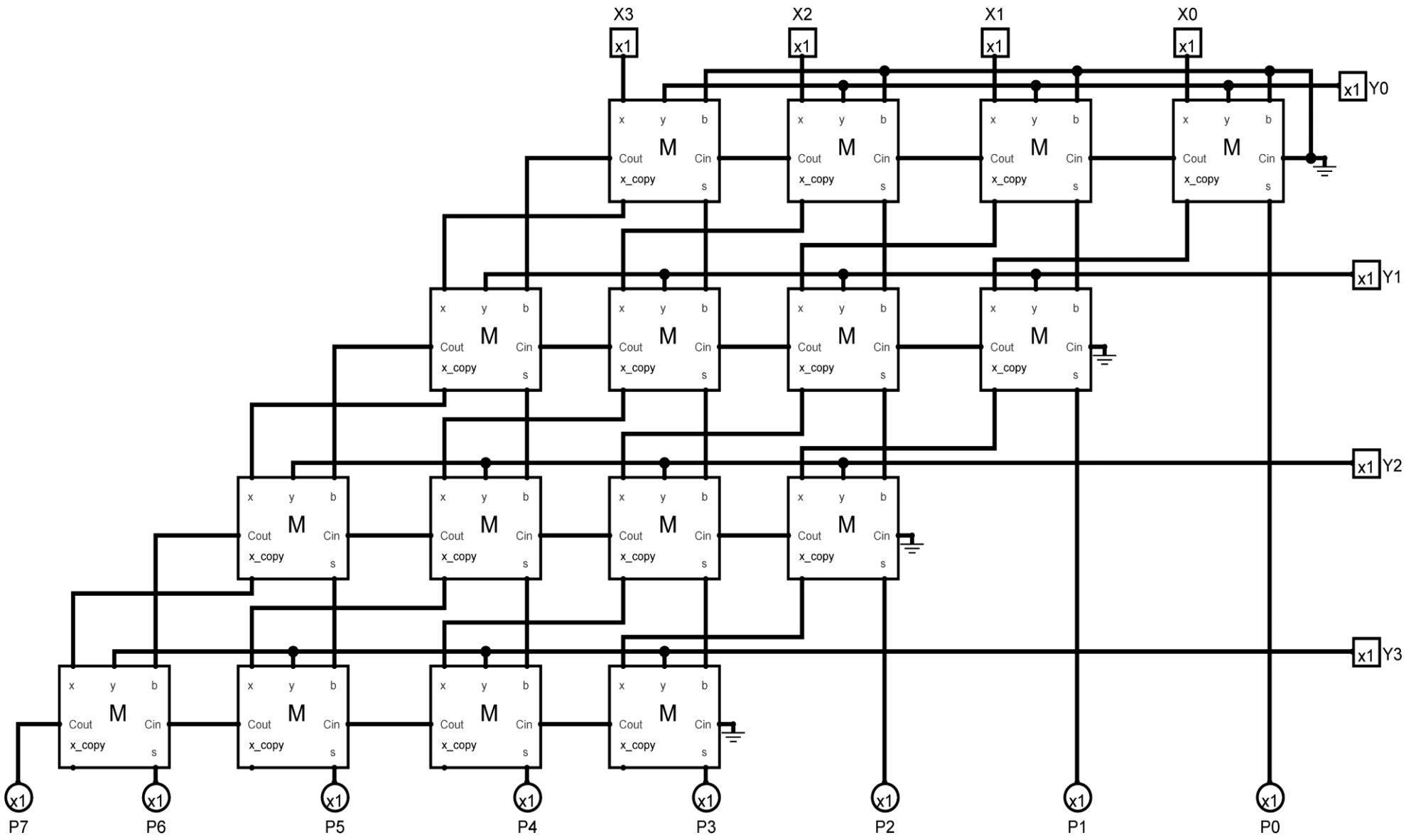

Figure: 4 *4 Unsigned Multiplier

4 * 4 Unsigned Multiplier Simulation

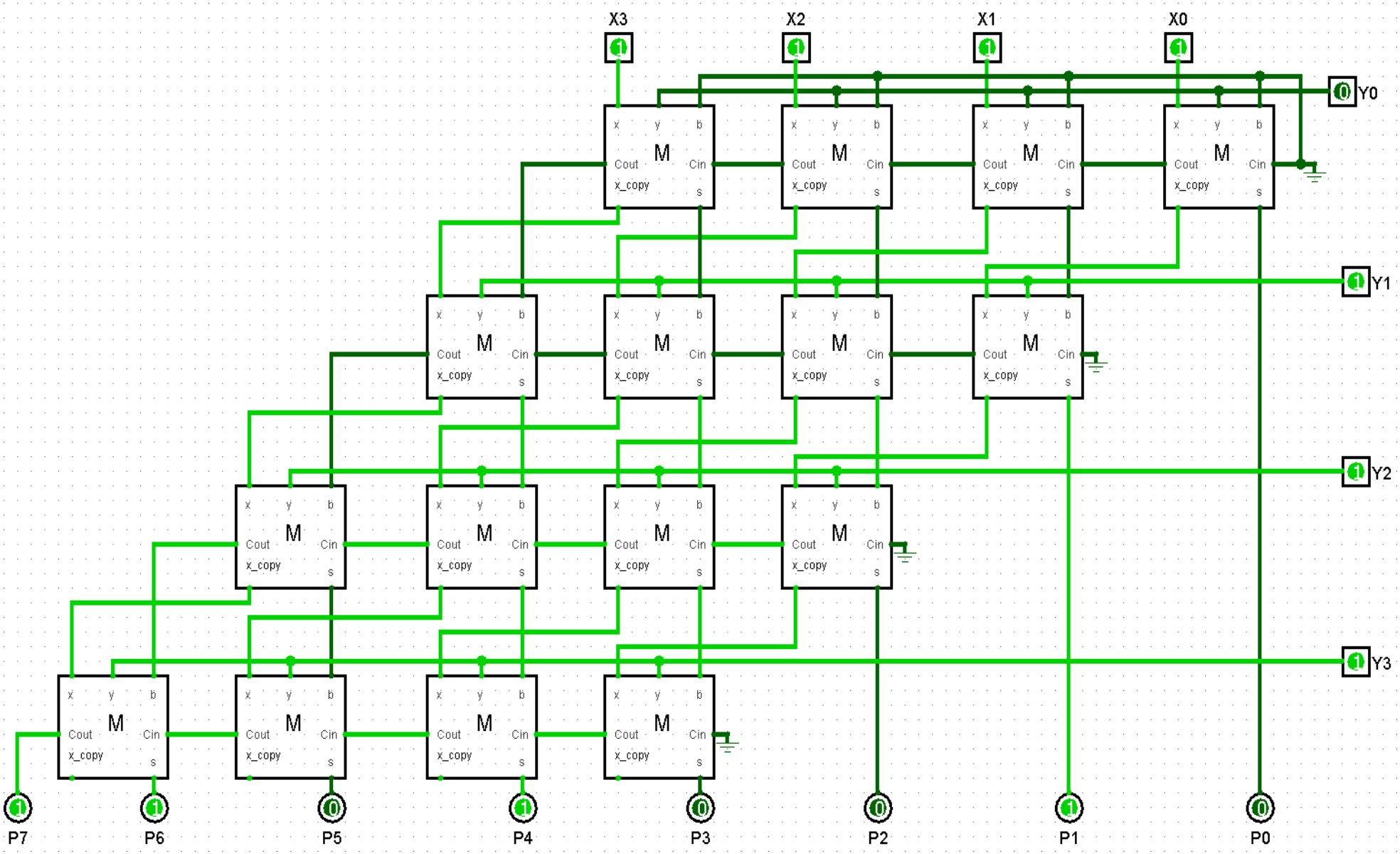

Figure: 4 *4 Unsigned Multiplier Simulation for X = 1010 and Y = 1010

4 * 4 Unsigned Multiplier Simulation

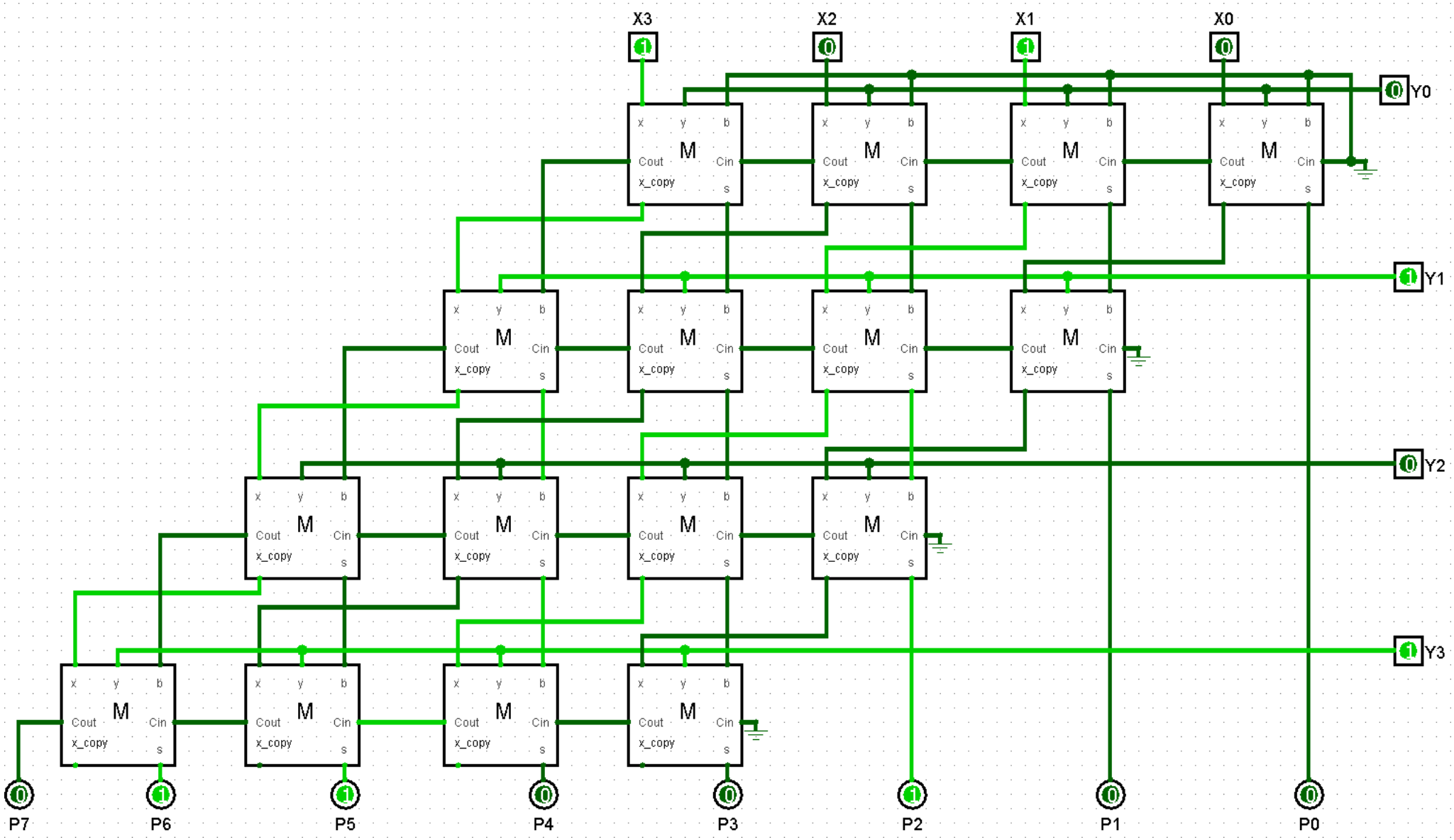

Figure: 4 *4 Unsigned Multiplier Simulation for X = 1010 and Y = 1010

Excercises

1. Multiply 1001*1010 and design a circuit which can calculate this.

2. How does your computer do multiplication in program statement,
   Z = X * Y or Z = 1001 * 1010 (both are unsigned).
   Design a circuit and show how it calculates the result in each component.

3. Design a 2/3/4 bit unsigned multiplier and
   show output of each circuit in when X = 10 or 111 or 1001 and Y=11 or 100 or 1111.